BoWex® FLE-PA
Torsionally stiff flange couplings

Axial plug-in, maintenance-free, torsionally stiff

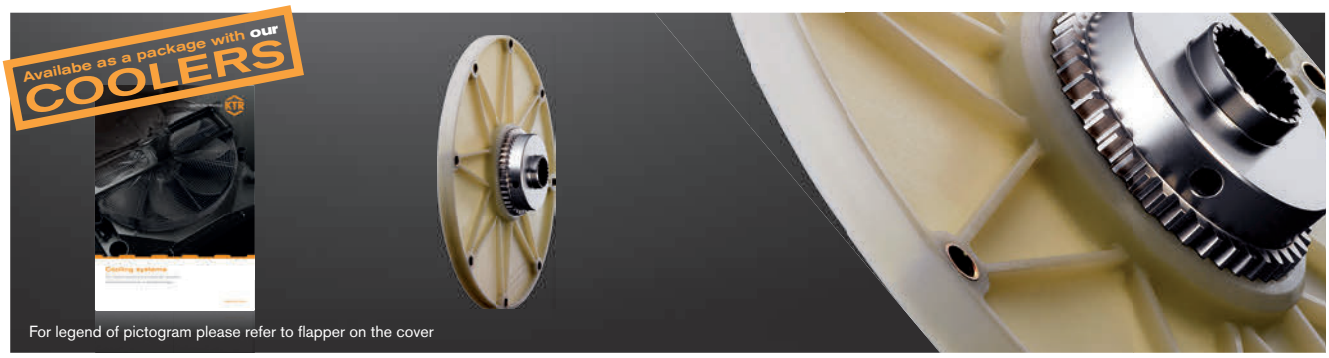

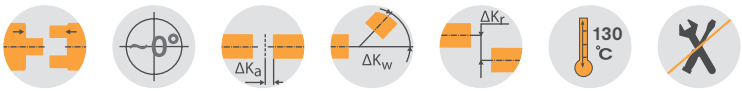

BoWex® FLE-PA – Dimensions/nominal dimension acc. to SAE

Size	Pilot bore	Finish bore d		Dimensions [mm]								Special length	Nominal size acc. to SAE (D_3)						Max. axial displacement [mm]
		Min.	Max.	D	D_1	l_1	l_3	l_7	l_8	l_{10}	l_{11}	l_1 max.	6 ½"	7 ½"	8"	10"	11 ½"	14"	
48	-	20	48	68	100	50	41	50	20	13	48	up to 60	●	●	●	●			± 2
T 48	13	15	48	68	100	50	38	45	20	13	46	-	●	●	●	●			± 1
T 55	17	20	55	85	115	50	37	48	24	13	48	-	●	●	●	●			± 2
65 / T 65	21	30	65	96	132	55	45	54	27	21	51	up to 70			●	●	●		± 2
T 70	26	30	70	100	153	60	48	56	30	21	57	-				●			± 2
80 / T 80	31	35	90	124	170	90	78	87	30	21	87	-				●	●		± 2
100 / T 100	38	40	100	152	265	110	78	108	35	21	110	-					●	●	± 2
125 / T 125	45	50	125	192	250	140	113	140	50	28	97	-					●	●	± 2

Special flange dimensions see page 212 et seqq. and on request

Technical data of BoWex® FLE-PA – Torques/weights/mass moments of inertia/torsion spring stiffness

Size	Torque T_K [Nm]			Weight/mass moment of inertia J	Hub with max. bore	FLE-PA flanges according to SAE						Dynamic torsion spring stiffness with +60 °C/ψ = 0.4 [Nm/rad]			
	T_{KN}	$T_{K\ max.}$	T_{KW}			6 ½"	7 ½"	8"	10"	11 ½"	14"	0.30 T_{KN}	0.50 T_{KN}	0.75 T_{KN}	1.00 T_{KN}
48	240	600	120	[kg]	0.79	0.32	0.43	0.51	0.64	–	–	35 x 10^3	75 x 10^3	105 x 10^3	125 x 10^3
				[kgm²]	0.0007	0.0021	0.0035	0.0049	0.0085						
T 48	300	750	150	[kg]	0.79	0.32	0.43	0.51	0.64	–	–	40 x 10^3	86 x 10^3	120 x 10^3	143 x 10^3
				[kgm²]	0.0007	0.0021	0.0035	0.0049	0.0085						
T 55	450	1125	225	[kg]	1.20	0.34	0.62	0.45	0.646	–	–	90 x 10^3	140 x 10^3	170 x 10^3	195 x 10^3
				[kgm²]	0.0016	0.0022	0.0053	0.0044	0.0086						
65	650	1600	325	[kg]	1.50	–	–	0.63	0.64	0.89	–	110 x 10^3	160 x 10^3	200 x 10^3	230 x 10^3
				[kgm²]	0.0027			0.0064	0.0065	0.012					
T 65	800	2000	400	[kg]	1.60	–	–	0.63	0.64	0.89	–	130 x 10^3	190 x 10^3	240 x 10^3	280 x 10^3
				[kgm²]	0.0035			0.0064	0.0065	0.012					
T 70	1000	2500	500	[kg]	2.60	–	–	–	0.941	–	–	165 x 10^3	315 x 10^3	345 x 10^3	368 x 10^3
				[kgm²]	0.0059				0.0132						
80	1200	3000	600	[kg]	5.20	–	–	–	1.05	1.12	–	200 x 10^3	410 x 10^3	580 x 10^3	700 x 10^3
				[kgm²]	0.0151				0.015	0.022					
T 80	1500	3750	750	[kg]	5.20	–	–	–	1.05	1.12	–	240 x 10^3	450 x 10^3	638 x 10^3	770 x 10^3
				[kgm²]	0.0151				0.015	0.022					
100	2050	5150	1025	[kg]	9.37	–	–	–	–	1.16	8.45	500 x 10^3	700 x 10^3	856 x 10^3	950 x 10^3
				[kgm²]	0.0401					0.021	0.234				
T 100	2500	6250	1250	[kg]	9.37	–	–	–	–	1.16	8.45	600 x 10^3	830 x 10^3	960 x 10^3	1070 x 10^3
				[kgm²]	0.0401					0.021	0.234				
125	4250	10700	2125	[kg]	19.73	–	–	–	–	2.09	9.85	1280 x 10^3	1885 x 10^3	2280 x 10^3	2665 x 10^3
				[kgm²]	0.1359					0.043	0.306				
T 125	5300	13250	2650	[kg]	19.73	–	–	–	–	2.09	9.85	1600 x 10^3	2250 x 10^3	2700 x 10^3	3200 x 10^3
				[kgm²]	0.1359					0.043	0.306				

Mounting procedure, screw type with property class, tightening torques as per KTR assembly instructions (see www.ktr.com).

Short mounting version

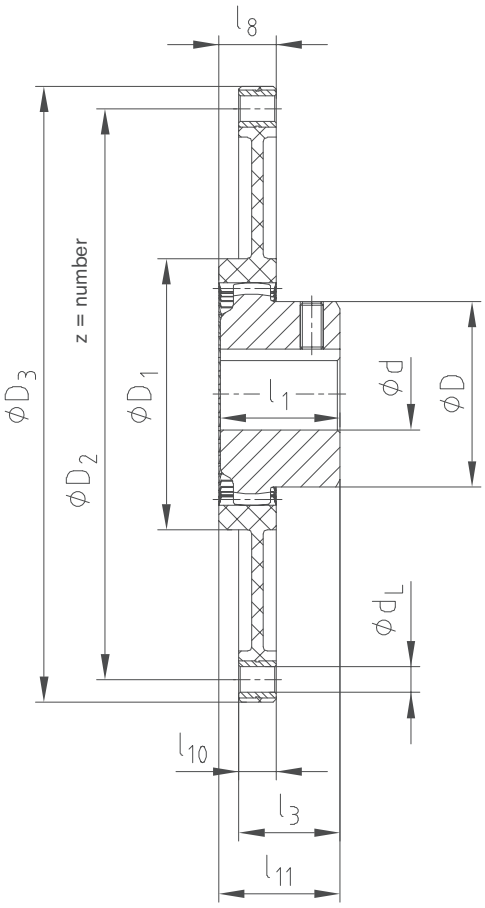

Long mounting version

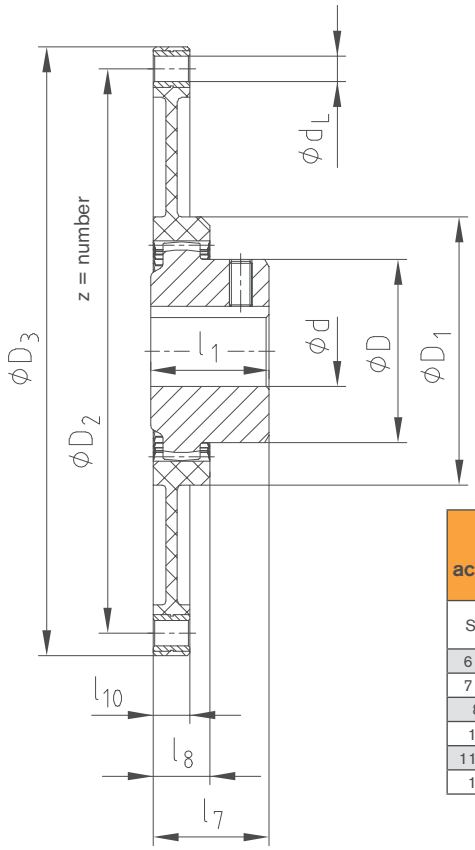

Flange dimensions according to SAE J620 [mm]				
Size	D_3	D_2	z	d_L
6 ½"	215.9	200.02	6	9
7 ½"	241.3	222.25	8	9
8"	263.52	244.47	6	11
10"	314.32	295.27	8	11
11 ½"	352.42	333.37	8	11
14"	466.72	438.15	8	13

Example of installation

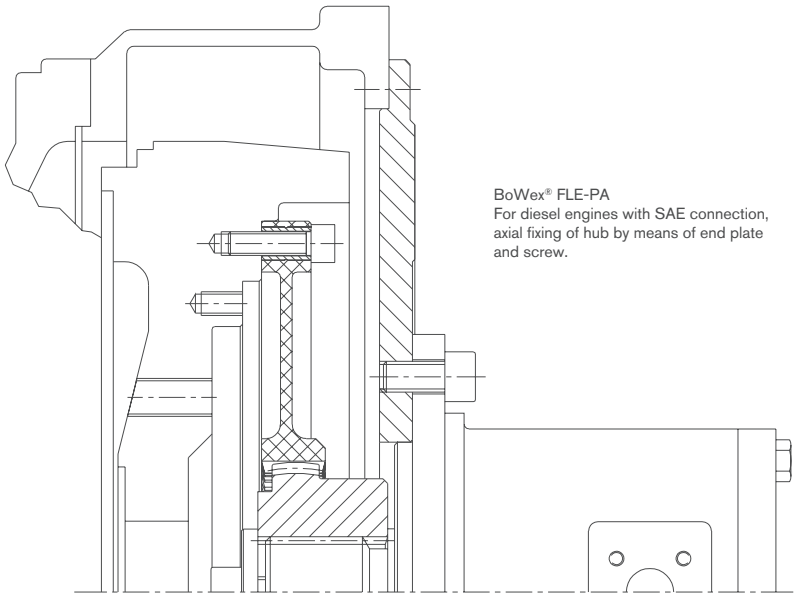

BoWex® FLE-PA
For diesel engines with SAE connection, axial fixing of hub by means of end plate and screw.

BoWex® FLE-PAC
Torsionally stiff flange couplings

Axial plug-in, extremely short design, carbon-fibre reinforced material

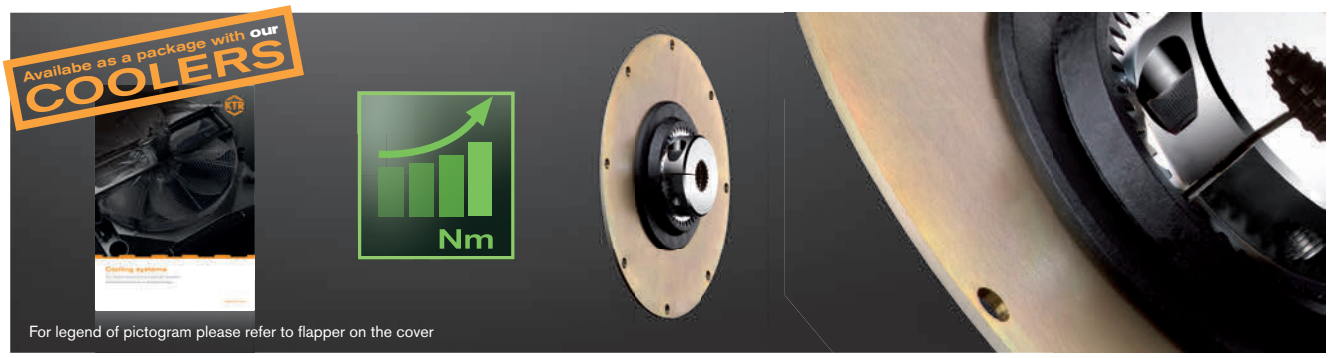

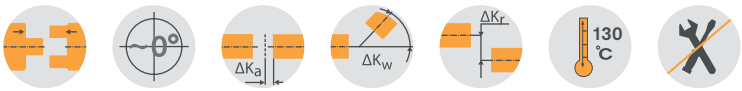

BoWex® FLE-PAC – Dimensions/nominal dimension to SAE																		
Size	Pilot bore	Finish bore d		Dimensions [mm]							Special length l_1 max.	Nominal size acc. to SAE (D_3)						Max. axial displacement [mm]
		Min.	Max.	D	D_1	l_1	l_3	l_7	l_8	l_{10}		6 ½"	7 ½"	8"	10"	11 ½"	14"	
48 / T 48	13	15	48	68	110	50	35	46	25	3	up to 60	●	●	●	●			± 3
T 55	17	20	55	85	148	50	32	42	28	3	-	●	●	●	●			± 3
65 / T 65	21	30	65	96	165	55	36	46	32	4	up to 70	●	●	●	●	●		± 3
80 / T 80	31	35	90	124	220	90	72	76	35	4	-				●	●	●	± 3
100 / T 100	38	40	100	152	280	110	85	102	47	5	-					●	●	± 3
125 / T 125	45	50	125	192	250	140	113	140	50	28	-					●	●	± 3

Special flange dimensions deviating from SAE standard are also available.

Technical data of BoWex® FLE-PAC – Torques/weights/mass moments of inertia/torsion spring stiffness																
Size	Torque T_K [Nm]			Weight/mass moment of inertia J	Hub with max. bore	FLE-PAC flanges according to SAE						Dynamic torsion spring stiffness with +60 °C/ψ = 0.45 [Nm/rad]			
	T_{KN}	$T_{K\,max.}$	T_{KW}			6 ½"	7 ½"	8"	10"	11 ½"	14"	0.30 T_{KN}	0.50 T_{KN}	0.75 T_{KN}	1.00 T_{KN}
48	300	600	150	[kg]	0.79	0.77	0.98	1.19	1.73			64 x 10^3	95 x 10^3	114 x 10^3	132 x 10^3
				[kgm²]	0.0007	0.0049	0.0077	0.0109	0.0221						
T 48	370	740	185	[kg]	0.79	0.77	0.98	1.19	1.73			91 x 10^3	129 x 10^3	155 x 10^3	182 x 10^3
				[kgm²]	0.0007	0.0049	0.0077	0.0109	0.0221						
T 55	550	1100	275	[kg]	1.20	0.74	0.95	1.16	1.7			181 x 10^3	258 x 10^3	312 x 10^3	358 x 10^3
				[kgm²]	0.0016	0.0049	0.0077	0.0109	0.0222						
65	800	1600	400	[kg]	1.50	0.93	1.2	1.48	2.20	2.83		214 x 10^3	329 x 10^3	397 x 10^3	451 x 10^3
				[kgm²]	0.0027	0.0065	0.0101	0.0145	0.0294	0.0467					
T 65	1000	2000	500	[kg]	1.60	0.93	1.2	1.48	2.20	2.83		256 x 10^3	381 x 10^3	461 x 10^3	516 x 10^3
				[kgm²]	0.0035	0.0065	0.0101	0.0145	0.0294	0.0467					
80	1500	3000	750	[kg]	5.20				2.27	2.90	5.20	486 x 10^3	713 x 10^3	923 x 10^3	1156 x 10^3
				[kgm²]	0.0151				0.0312	0.0485	0.1462				
T 80	1850	3700	925	[kg]	5.20				2.27	2.90	5.20	556 x 10^3	815 x 10^3	1065 x 10^3	1329 x 10^3
				[kgm²]	0.0151				0.0312	0.0485	0.1462				
100	2550	5100	1275	[kg]	9.37					3.35	6.22	679 x 10^3	929 x 10^3	1218 x 10^3	1457 x 10^3
				[kgm²]	0.0401					0.0606	0.1828				
T 100	3100	6200	1550	[kg]	9.37					3.35	6.22	767 x 10^3	1030 x 10^3	1343 x 10^3	1594 x 10^3
				[kgm²]	0.0401					0.0606	0.1828				
125	5350	10700	2675	[kg]	19.73					2.09	9.85	1538 x 10^3	2098 x 10^3	2528 x 10^3	2980 x 10^3
				[kgm²]	0.1359					0.043	0.306				
T 125	6600	13200	3300	[kg]	19.73					2.09	9.85	1887 x 10^3	2495 x 10^3	3035 x 10^3	3629 x 10^3
				[kgm²]	0.1359					0.043	0.306				

= Years of experience with applications at customer sites and additional test series in the KTR test field in Rheine enabled us to determine potentials allowing for an increase of the rated torques with some sizes of this series.

Mounting procedure, screw type with property class, tightening torques as per KTR assembly instructions (see www.ktr.com).

Short mounting version

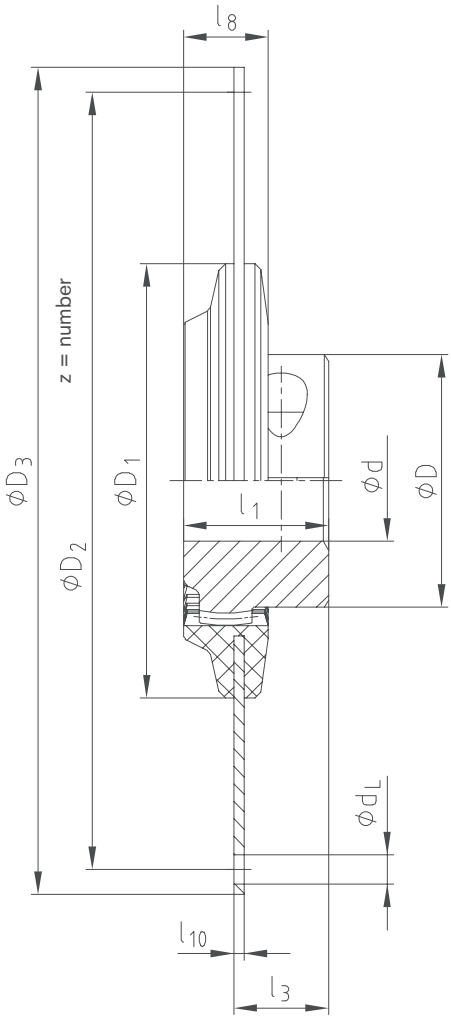

Long mounting version

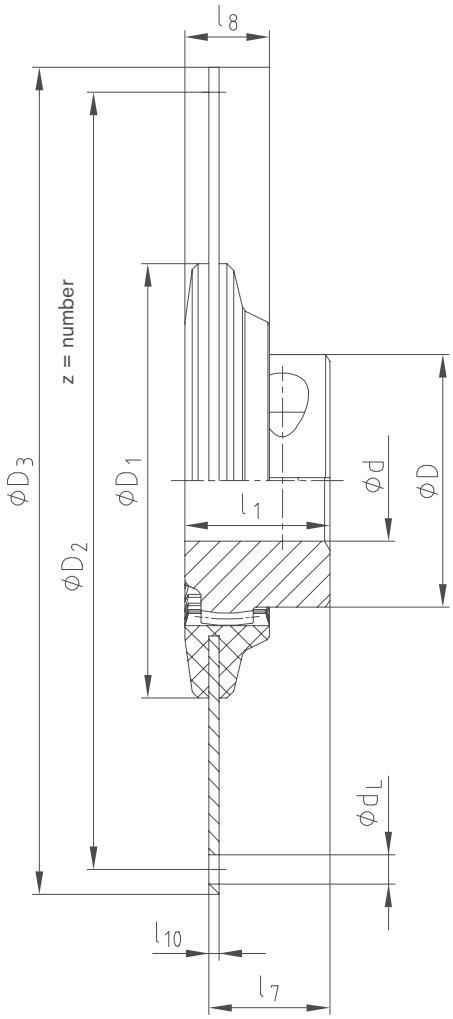

Flange dimensions according to SAE J620 [mm]				
Size	D_3	D_2	z	d_L
6 ½"	215.9	200.02	6	9
7 ½"	241.3	222.25	8	9
8"	263.52	244.47	6	11
10"	314.32	295.27	8	11
11 ½"	352.42	333.37	8	11
14"	466.72	438.15	8	14

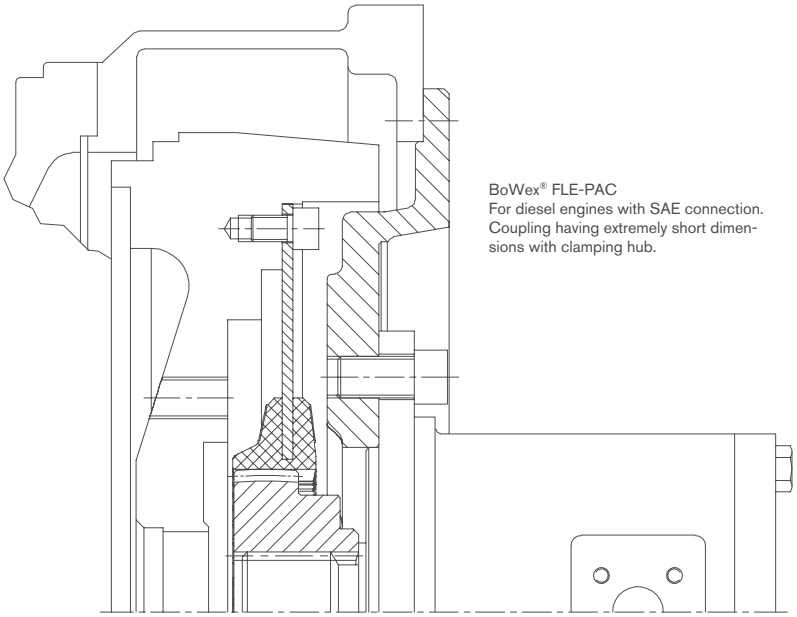

BoWex® FLE-PAC
For diesel engines with SAE connection.
Coupling having extremely short dimensions with clamping hub.

Selection according to SAE standard

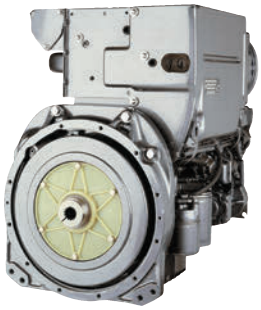

Determination of coupling

Determination of coupling size	Table 1
Connection dimension of coupling	Table 2
Hub type/mounting length	Table 3

SAE pump mounting flange

Flange size according to SAE 617	Table 4
Connection flange of hydraulic pump	Table 5

Short mounting version of coupling (l_3)

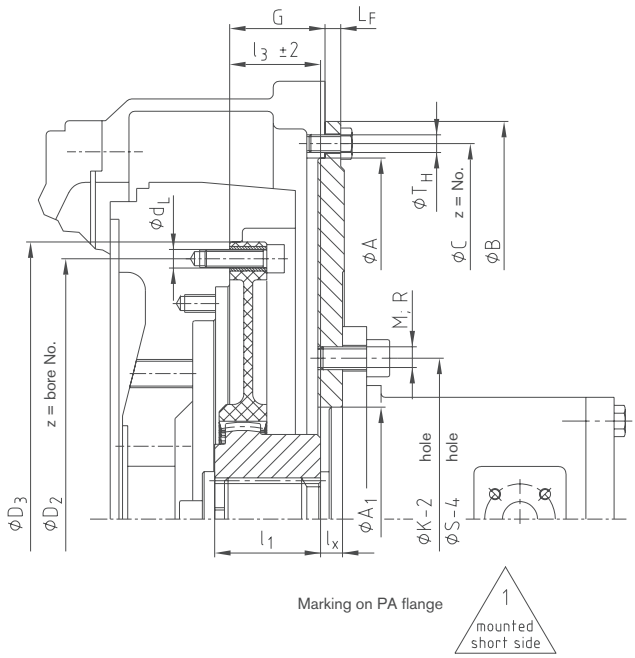

Long mounting version of coupling (l_7)

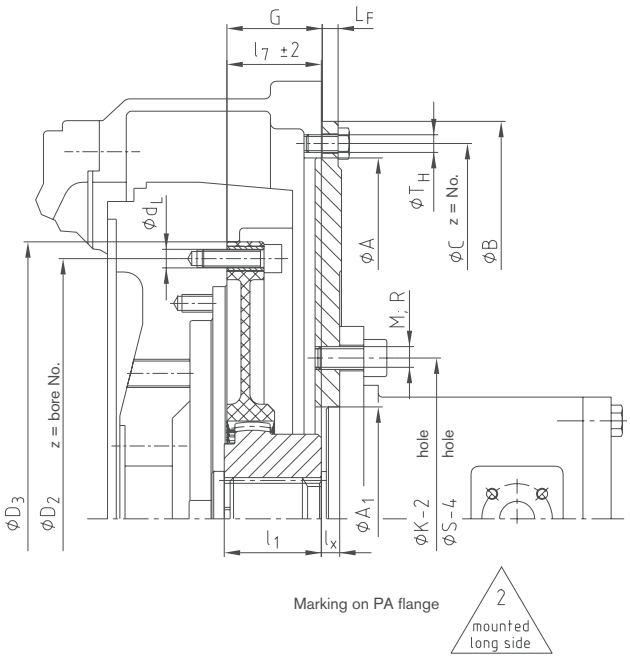

Spline hub

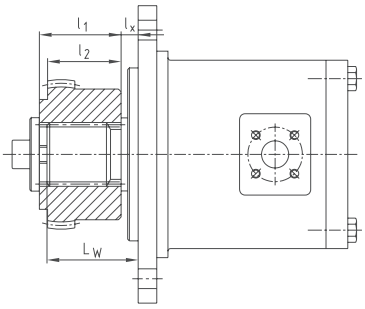

Clamping hub

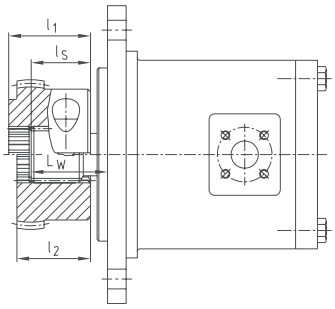

Determination of mounting length l_3 or l_7	
SAE shaft	$l_3 / l_7 = G + L_F - L_W + l_S$
DIN shaft	$l_3 / l_7 = G + L_F - l_X$

If axial fixing of the hub by means of an end plate and a screw is not possible for a pump shaft with involute spline, we recommend to use a clamping hub.

Mounting instructions:
The flange can be fastened to the engine flywheel by means of socket head cap screws according to DIN EN ISO 4762 quality 8.8 or by hexagon head screws quality 8.8. We recommend screws are loctited in position.

Screw tightening torque of FLE-PA flange on the flywheel	
M8	25 Nm
M10	49 Nm
M12	86 Nm

Screw tightening torque of spline clamping hubs DIN EN ISO 4762		
42/48	M10	49 Nm
T55/65/T70	M12	86 Nm
80/100/125	M16	210 Nm

For continuously updated data please refer to our online catalogue at www.ktr.com

Mounting dimensions according to SAE standard

1. Selection of coupling for diesel engine

Diesel engine power kW	Diesel engine power PS	Coupling size	Flywheel to SAE	G		Pump mounting flange	LF		Driving shaft of pump
up to 40	up to 55	48 FLE-PA	6 1/2"	30.15	1.19"	For dimensions to SAE see tables 3 and 4	9.5	0.375"	See Table 3 hub type SAE J 498 /DIN 5480
			7 1/2"	30.15	1.19"				
			8	62	2.44"				
			10	54	2.12"				
up to 75	up to 100	T55 FLE-PA	6 1/2"	30.15	1.19"				
			7 1/2"	30.15	1.19"				
			8	62	2.44"				
			10	54	2.12"				
up to 90	up to 120	65 FLE-PA	8	62	2.44"		9.5	0.375"	
			10	54	2.12"				
			11 1/2"	39.6	1.56"		12.7	0.5"	
up to 150	up to 200	T70 FLE-PA	10	54	2.12"		9.5	0.375"	
up to 180	up to 240	80 FLE-PA	10	54	2.12"		9.5	0.375"	
			11 1/2"	39.6	1.56"				
up to 285	380	100 FLE-PA	11 1/2"	39.6	1.56"				
			14	25.4	1"		12.7	0.5"	
up to 540	720	125 FLE-PA	11 1/2"	39.6	1.56"				
			14	25.4	1"				

4. Housing dimensions according to SAE 617 [mm]

SAE size	A	B	C	Z	TH	
SAE-1	511.18	552	530.2	12	M10	3/8"
SAE-2	447.68	489	466.7	12	M10	3/8"
SAE-3	409.58	451	428.6	12	M10	3/8"
SAE-4	361.95	403	381.0	12	M10	3/8"
SAE-5	314.33	356	333.4	8	M10	3/8"
SAE-6	266.7	308	285.7	8	M10	3/8"

5. Mounting flange for hydraulic pump acc. to SAE [mm]

SAE size	SAE flange with 2 holes					SAE flange with 4 holes				
	A_1	K-2	M		Z	A_1	S-4	R		Z
A	82.55	106.4	M10	3/8"	2	82.55	104.6	M10	3/8"	4
B	101.6	146.0	M12	1/2"	2	101.6	127.0	M12	1/2"	4
C	127.0	181.0	M16	5/8"	2	127.0	162.0	M12	1/2"	4
D	152.4	228.6	M16	5/8"	2	152.4	228.6	M16	5/8"	4
E	-	-	-	-	-	165.1	317.5	M20	3/4"	4

2. Dimensions of coupling flange according to SAE J620 [mm]

Nominal size	D_3	D_2	z = number	d_L
6 1/2"	215.90	200.02	6	9
7 1/2"	241.30	222.25	8	9
8"	263.52	244.47	6	11
10"	314.32	295.27	8	11
11 1/2"	352.42	333.37	8	11
14 "	466.72	438.15	8	14

3. Selection of coupling hubs - Determination of mounting length l_3 or l_7

BoWex® coupling size	Pump shaft to SAE J 498 and DIN 5480	Spline hub	Spline clamping hub	Dimensions of coupling hub [mm]			Mounting length of coupling l_3 or l_7								Code to order coupling hub Specify coupling size
							Flange size 6 1/2" and 7 1/2"		Flange size 8"		Flange size 10"		Flange size 11 1/2"		
							K	L	K	L	K	L	K	L	
				l_1	l_2	l_S	l_3	l_7	l_3	l_7	l_3	l_7	l_3	l_7	
42	SAE-16/32 DP PI-S 3/4" z = 11		x	42	-	33	33	42							P559101
42	SAE-16/32 DP PB-S 7/8" z = 13		x	42	-	-	33	42							P567101
42	SAE-16/32 DP PB-BS 1" z = 15		x	42	-	27	33	42							P660201
48	SAE-16/32 DP		x	50	-	45	41	50		50	41	50			P663301
65	PA-S 1 3/8" z = 21		x	50	-	48				54	45	54	41		P663301
65	SAE-12/24 DP PC-S 1 1/4" z = 14		x	55	-	44				54	45	54	41		P656201
65	SAE-16/32 DP PD-S 1 1/2" z = 23		x	-	49	45						53	41		P664301
80	SAE-16/32 DP PE-S 1 3/4" z = 27		x	55	-	-							33	44	P565402
42	25 x 1.25 x 18	x		42	-	-	33	42							P000205
42	DIN 5480		x	42	-	-	33	42							P500202
42	30 x 2 x 14 DIN 5480		x	42	-	-	33	42							P500203
48		x		50	-	-	41	50							P000206
48			x	50	-	-	41	50		50		50			P500203
48	35 x 2 x 16 DIN 5480	x		46	-	-	37	46							P000303
65		x		55	-	-						54	39		P000303
65			x	60	-	-			50	59	50	59	39		P500301
65	40 x 2 x 18	x		55	-	-						54	39		P000304
65	DIN 5480		x	55	-	-				54	45	54	39		P500302
65	45 x 2 x 21	x		-	64	-			60	69	60	69	39		P000403
65	DIN 5480		x	55	-	-				54	45	54	39		P500401
80	50 x 2 x 24 DIN 5480		x	55	-	-							37	42	P500405

Shown above is a small overview of splines available, other SAE or DIN splines are also available.

Ordering example: Coupling FLE-PA/FLE-PAC			SAE pump mounting flange	
BoWex® 48 FLE-PA	7 1/2"	P663301	SAE-4	B-2L
Coupling size	SAE connection of coupling	Code of coupling hub	Pump mounting flange for engine housing	Pump flange acc. to SAE 2 holes/4 holes standard metric fastening thread
Table 1	Table 2	Table 3	Table 4	Table 5

Special flange programme, deviations from the SAE standard

Fitting to diesel engines: Hatz

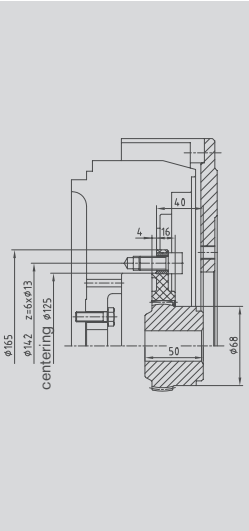

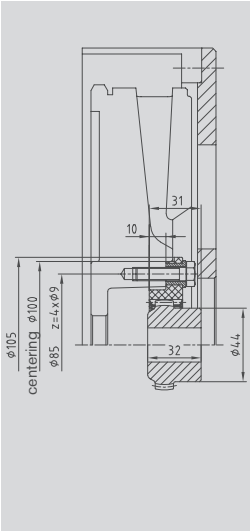

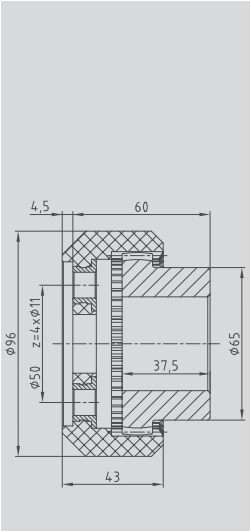

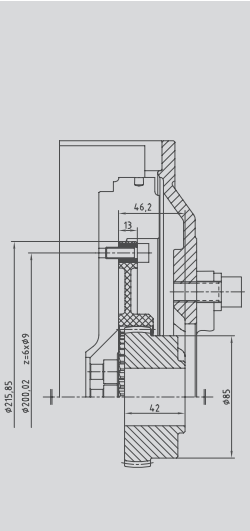

Coupling size	BoWex® 48 FLE-PA, Ø165	BoWex® 28 FLE-PA, Ø105	BoWex® 48 FLE-PA, Ø96	BoWex® T55 FLE-PA
	Hatz	Hatz	Hatz	Hatz
Engine type	2L/3L/4L41C 2M/3M/4M41 4M42,4L42C	1D81 / 1D90	Z788 / Z789 / Z790	2-4 H50

Fitting to diesel engines: VW Mitsubishi

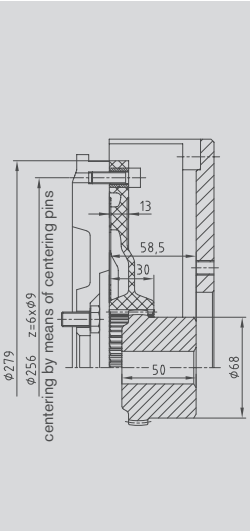

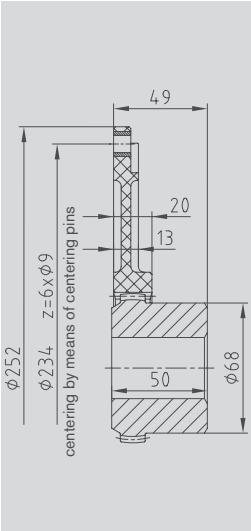

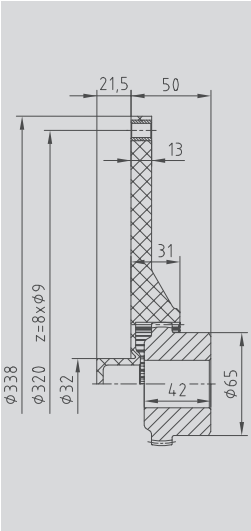

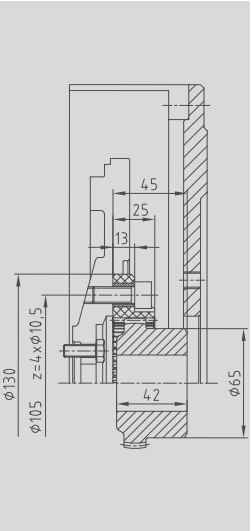

Coupling size	BoWex® 48 FLE-PA, Ø279	BoWex® 48 FLE-PA, Ø252	BoWex® 48 FLE-PA	BoWex® 48 FLE-PA, Ø130
	VW	VW	Mitsubishi	Mitsubishi
Engine type	028.B / M344	062.2 / 068.5 / 6 / A / D	Ø338-32	Series L / Series K

Fitting to diesel engines: Perkins Lombardini

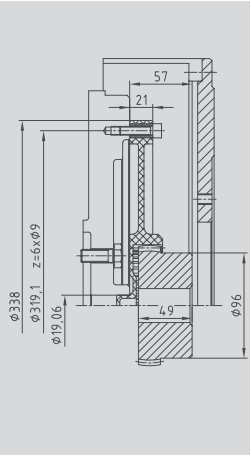

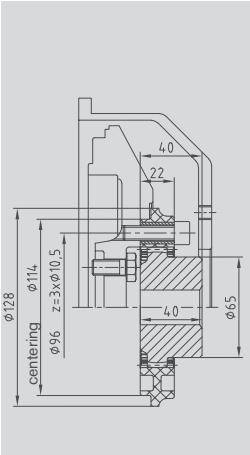

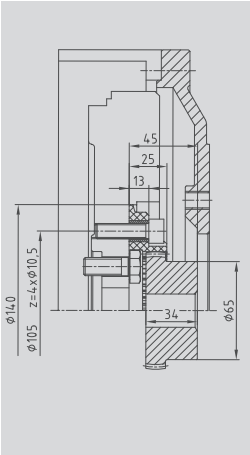

Coupling size	BoWex® 65 FLE-PA, Ø338	BoWex® 48 FLE-PA, Ø128	BoWex® 48 FLE-PA, Ø140
	Perkins 1104C-44T	Lombardini	Lombardini
Engine type	Flywheel No. D0014	FOCS series	LDW

BoWex® FLE-PA
Torsionally stiff flange couplings

Special flange programme, deviations from the SAE standard

Fitting to
diesel engines:
Perkins
Isuzu
Cummins

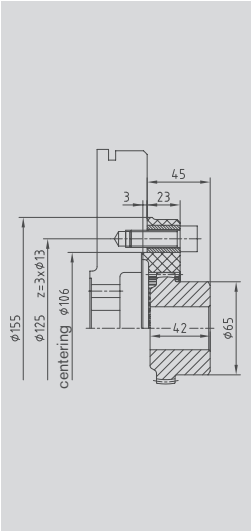

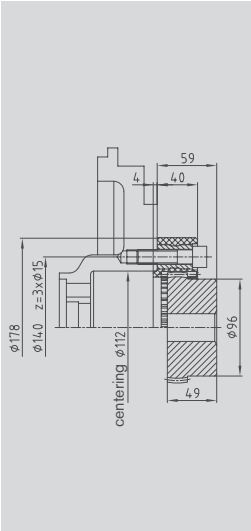

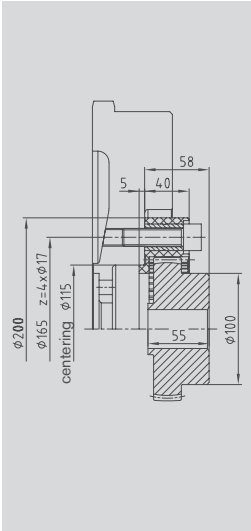

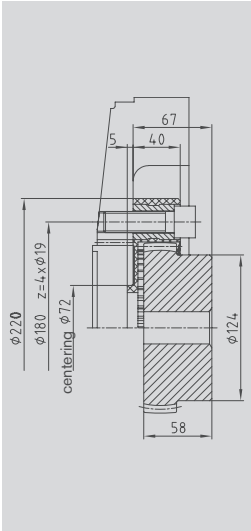

Coupling size	BoWex® 48 FLE-PA, Ø155	BoWex® 65 FLE-PA, Ø178	BoWex® 70 FLE-PA, Ø200	BoWex® 80 FLE-PA, Ø220
Engine type	3 holes, Ø125	3 holes, Ø140	4 holes, Ø165	4 holes, Ø180

Fitting to
diesel engines:
Caterpillar
Daimler
Cummins
John Deere

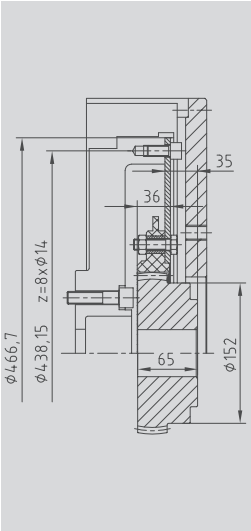

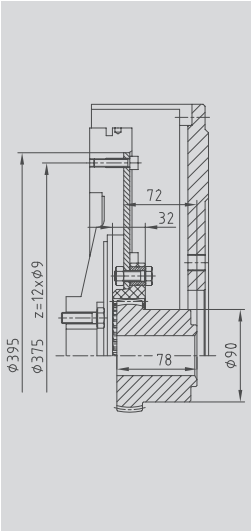

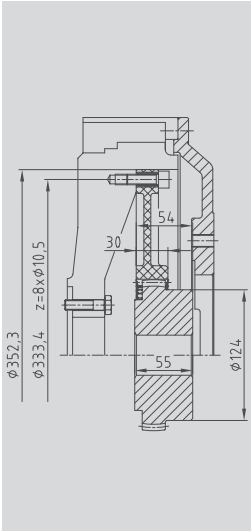

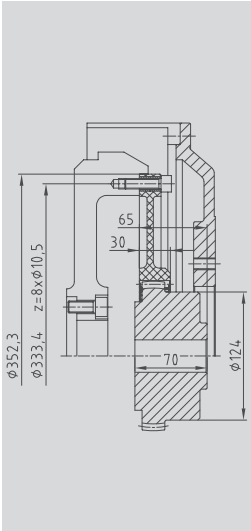

Coupling size	BoWex® T100 FLE-PA, 14"	BoWex® T65 FLE-PA, Ø395	BoWex® 80 FLE-PA, 11 1/2"	BoWex® 80 FLE-PA 11 1/2"
	Caterpillar	Daimler	Cummins	John Deere
Engine type	C 10 / C 12	OM904	QSX/QSB	

Fitting to
shaft motors:
Hatz
Honda
Briggs & Stratton
Yanmar
Kohler
Robin

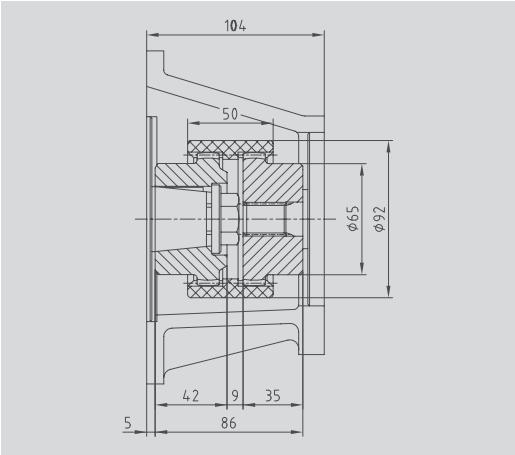

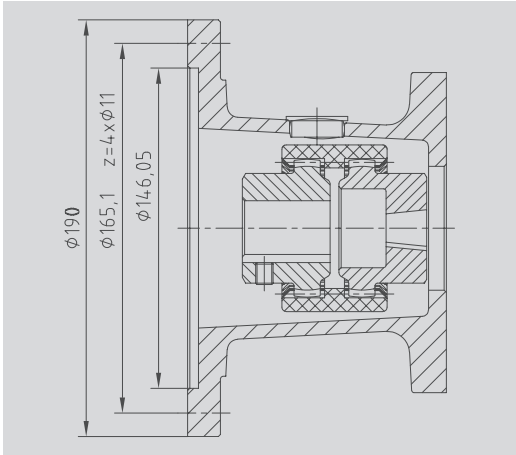

Coupling size	BoWex® M42	BoWex® shaft coupling type M28 and M32
Engine type	Hatz 2G30	Housing connection according to SAE J609A

Flange couplings and pump connection housings for KUBOTA engines

KUBOTA
Super MINI series

Z-400
Z-442-B
Z-482-B
D-600
D-662-B
D-902-B
V-800

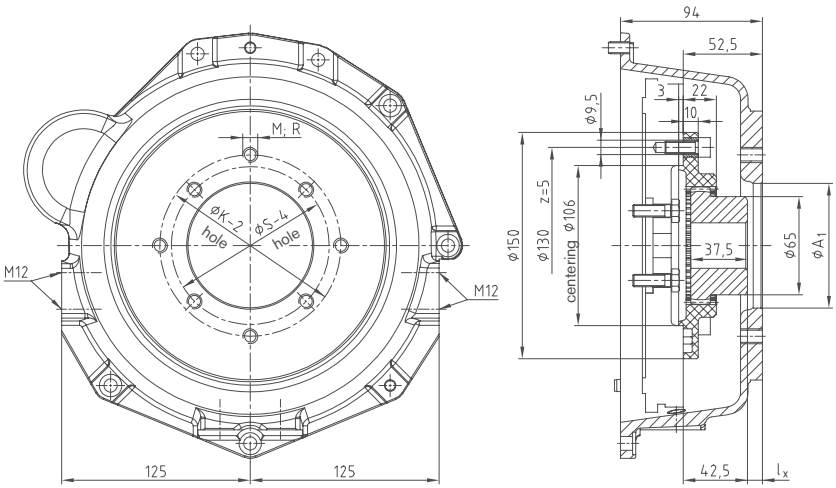

BoWex® 48 FLE-PA Ø 150 / pump connection housings

KUBOTA
Super 3 series

D 1403/1703
Flywheel
No. 190027991

V 1903/2203
Flywheel
No. 190002369

V 2003-T

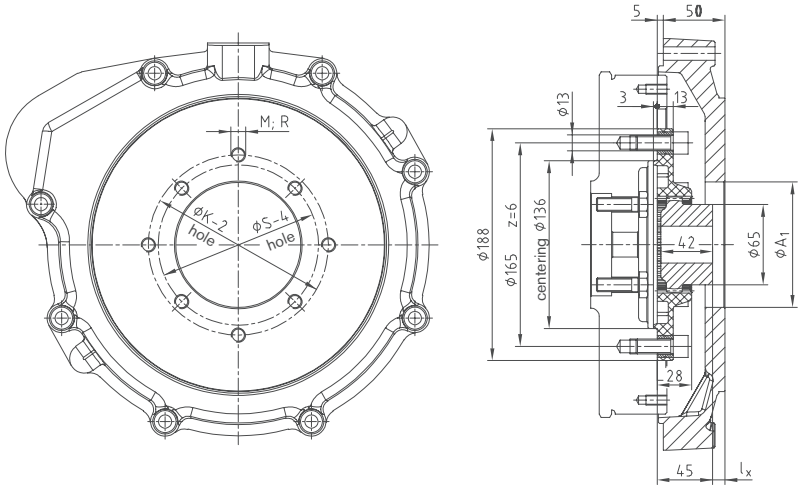

BoWex® 48 FLE-PA Ø 188 / pump connection housings

KUBOTA
Super 5 series

D 905
D 1005
D 1105
D 1105-T
V 1205
V 1305
V 1505

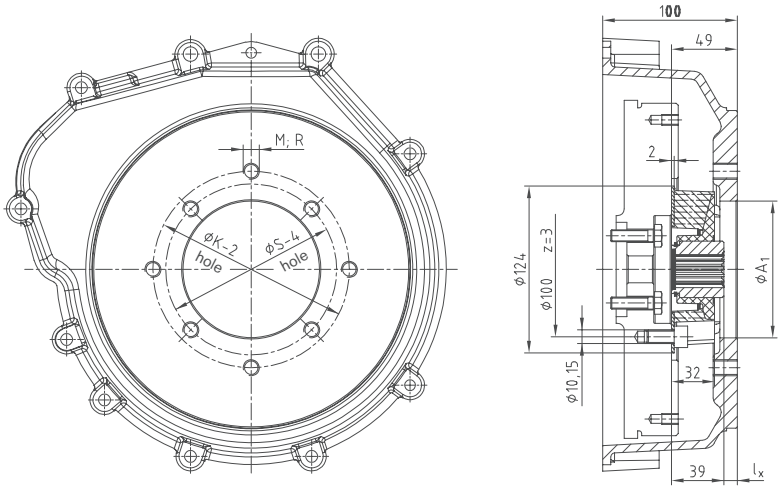

MONOLASTIC® 28 Ø 124 / pump connection housings

For continuously updated data please refer to our online catalogue at www.ktr.com

BoWex® FLE-PA
Torsionally stiff flange couplings

Flange couplings and pump connection housings for Perkins engines

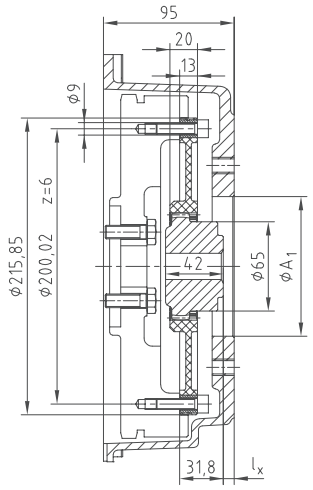

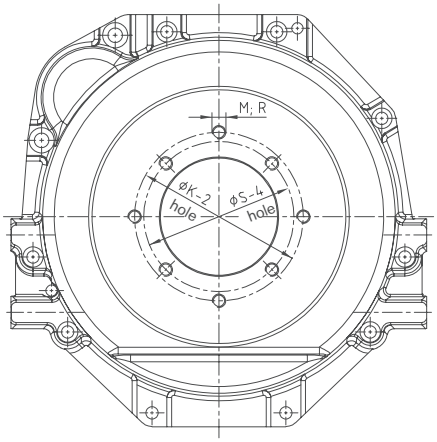

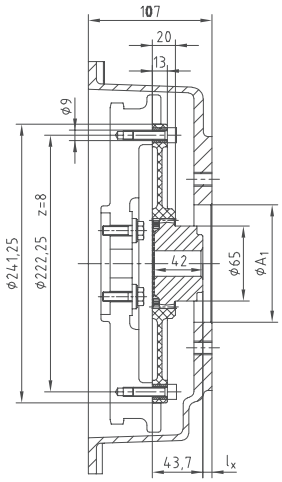

Perkins 403D - 10/11

Perkins 403D - 13/15

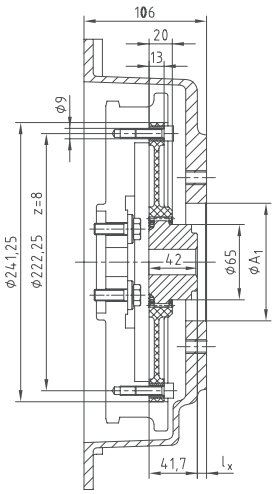

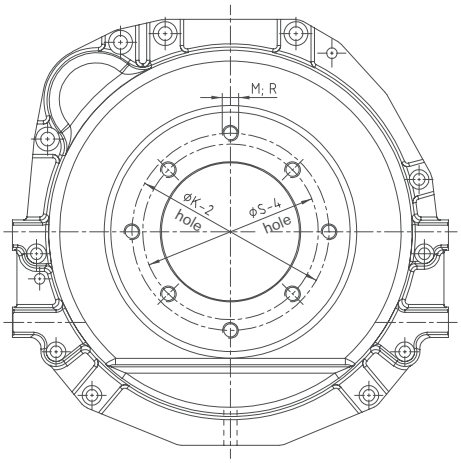

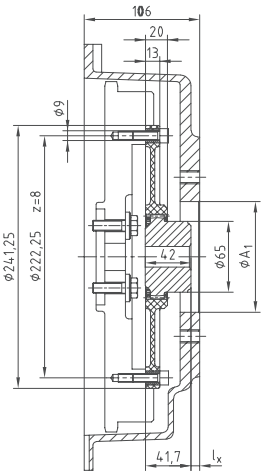

Perkins 404D - 20

Perkins 404D - 22

Other selections on request for Yanmar Mitsubishi etc.

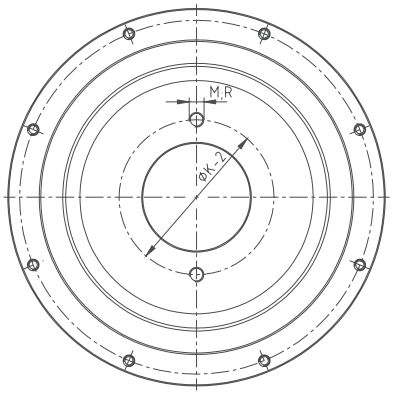

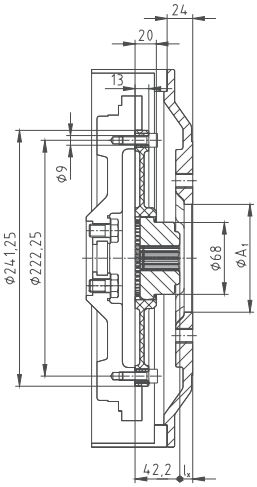

Mitsubishi SL series

Yanmar TNV series

Selection of DEUTZ engines FL/M 1011 and FL/M 2011, TCD/TD/D 2.9 L4, TDC/T 3.6 L

Anbaukombination A

Antrieb: Hydraulikpumpen
BoWex® 48 FLE-PA 6 1/2"
SAE-4.0/33 Pumpenanbauflansch

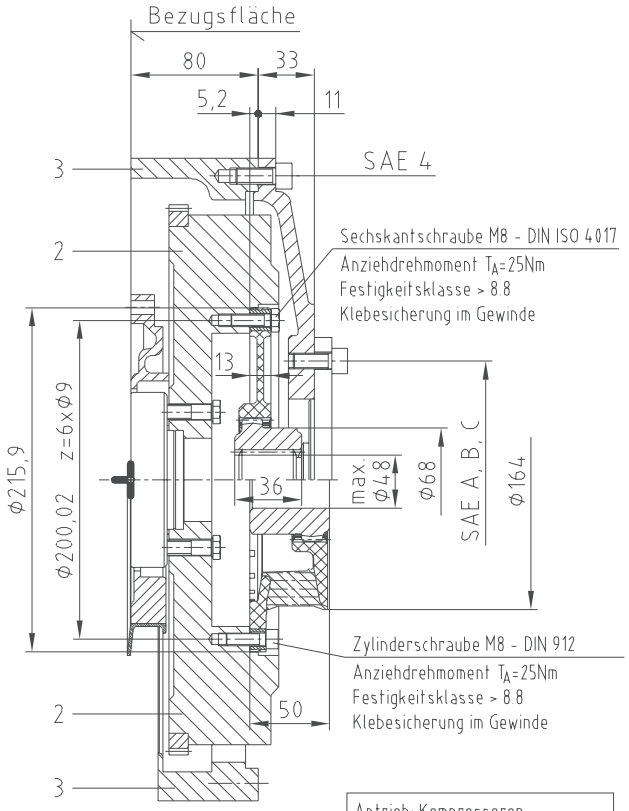

Anbaukombination B

Antrieb: Kompressoren,
Wasserpumpen usw.
BoWex-Elastic® HE 6 1/2"

Anbaukombination C

Antrieb: Hydraulikpumpen
BoWex® 48 FLE-PA 8"
SAE-4.3/24 Pumpenanbauflansch

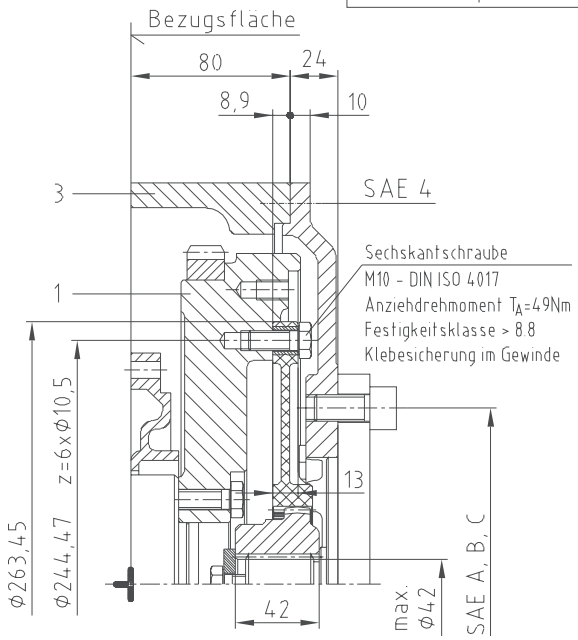

Anbaukombination D

Antrieb: Hydraulikpumpen
BoWex® T55 FLE-PA 8"
SAE-4.0/38 Pumpenanbauflansch

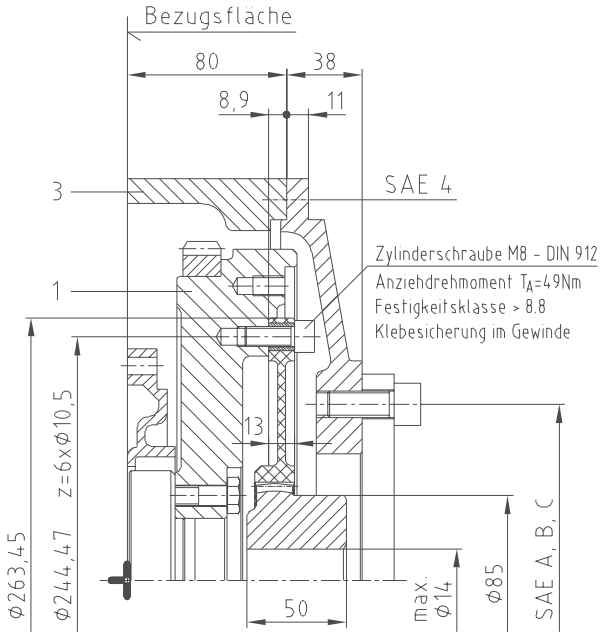

ACHTUNG: Entsprechend der Motorleistung ist die Kupplungsanordnung durch den Anwender zu prüfen. Nach erfolgtem Kupplungsanbau Kurbelwellenlängsspiel prüfen. Sollmaß für Lagerluft 0,1 ... 0,3 mm.
DEUTZ übernimmt keine Haftung für außerhalb des DEUTZ Lieferumfanges liegende Maßgaben und/oder Teile.

Bei techn. Rückfragen hinsichtlich der Kupplungsausführung wenden Sie sich bitte an:
KTR-Kupplungstechnik GmbH
Postfach 1763 D-48407 Rheine
Telefon +49 - 05971 / 798-0

D	C	B	A	Pos.	Benennung	Nummer	G(kg)	Baus.-Nr.
1	1	1	1	3	Zwischengehäuse (SAE-4)	0427 0980 KZ 0138-52 0417 1040 UA 0138-52	15	0553
-	-	1	1	2	Schwungrad (SAE 6 1/2") J= 0,499 kgm²	0428 0586 KZ 0138-05 0417 1301 UA 0138-05	30,3	3174
1	1	-	-	1	Schwungrad (SAE 8 u.10") J= 0,405 kgm²	0427 2426 KZ 0138-05 0417 1301 UA 0138-05	25,3	2461

Anbau-kombination

UNLESS OTHERWISE SPECIFIED: DIMENSIONS ARE IN MILLIMETERS	CORNERS PER DIN 6784	GEOMETRIC TOLERANCES PER ISO 1101 GENERAL TOLERANCES	SURFACE TEXTURE PER ISO 1302 IN MICROMETERS	MATERIAL			PROJECTION METHOD	
Bauart TYPE FL/M1011 FL/M2011	Werkstückkanten nach DIN 4384	Form- und Lagetoleranzen nach DIN 7184 Allgemeintoleranzen	Oberflächen Angaben nach ISO 1302 Rz nach DIN 4762	Maßstab SCALE 1:1	Gewicht WEIGHT -		ISO 128 Darstellungs-Methode	
				Werkstoff-Nr. Rohteil-Nr. BLANK NO. -				
		Datum	Name	Benennung TITLE	Kupplungsanbau BoWex® FLE-PA / ELASTIC HE			
		Bearb. 17.12.83	Sha					
		Gepr. 12.12.83	Sh					
		Norm						
		QE. DEPT.	Ges.					
		DEUTZ AG		Zeichnungs-Nummer, Blatt-Nummer, EPN 0428 0967	Ckz/Fw. U B	Techn. Ordnungsnummer 0138-97	Blatt SHEET 1 von 1 Bl.	
Nkr. Zeit	Änderung REVISION	Dat./Na.	Gepr.	Urspr. ORIGIN.	Ers.-vr. REPLACES:			

For continuously updated data please refer to our online catalogue at www.ktr.com

Selection of DEUTZ engines BFM 1012/1013/2012/2013/1015

Anbaukombination A

BoWex® 65 FLE-PA 10"
SAE-4/9 Pumpenanbauflansch

Deutz-Motor
BF4/6M 1012/2012, BF4/6 1013/2013,
TCD/TD 2012 L04/06 2V/4V, TCD/TD 2013 L04 2V, TCD 4.1 L4

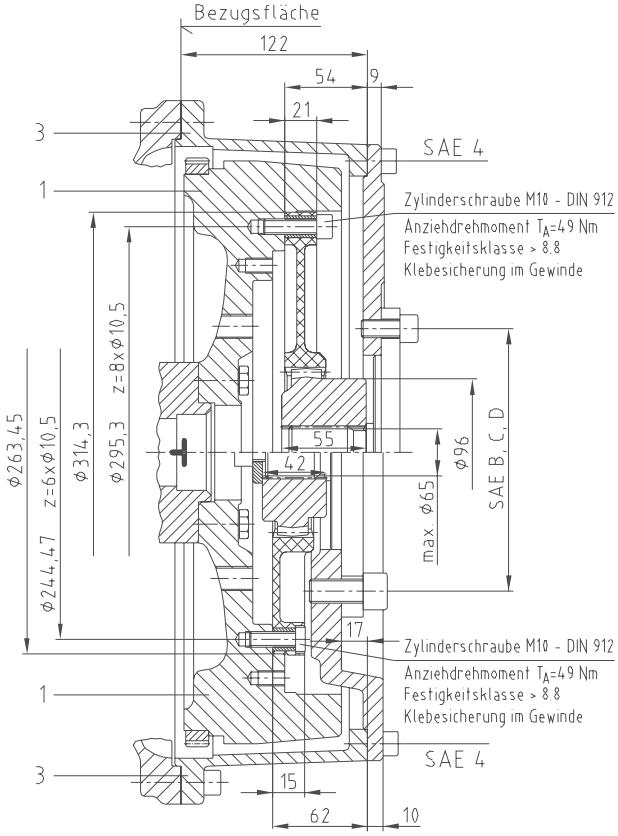

Anbaukombination D

BoWex® 100 FLE-PA 14"
SAE-1/20 Pumpenanbauflansch

Deutz-Motor
BF6/8M 1015/2015,
TCD 2015 V06, TCD 12.0 V6

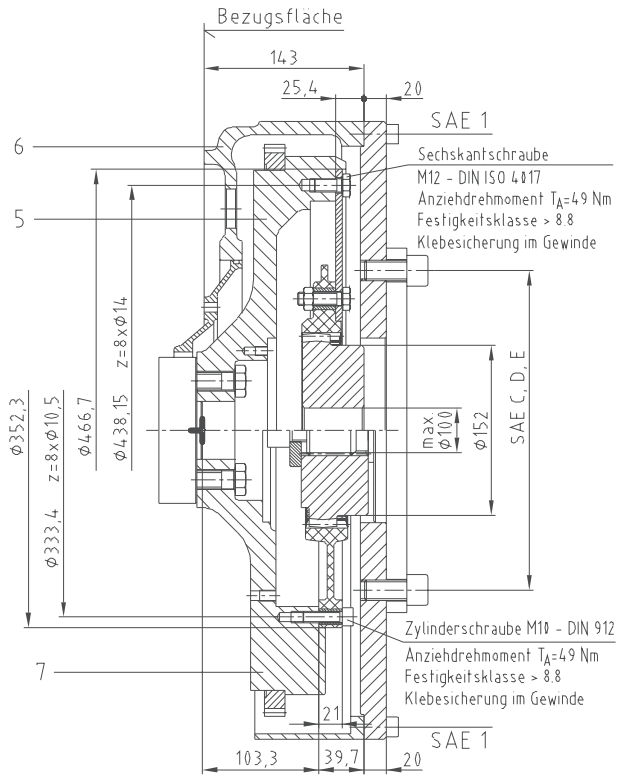

Anbaukombination B

BoWex® 65 FLE-PA 8"
SAE-4.2/-17 Pumpenanbauflansch

Deutz-Motor
BF4/6M 1012/2012, BF4/6 1013/2013,
TCD/TD 2012 L04/06 2V/4V, TCD/TD 2013 L04 2V, TCD 4.1 L4

Anbaukombination E

BoWex® 100 FLE-PA 11 1/2"
SAE-1/20 Pumpenanbauflansch

Deutz-Motor
BF6/8M 1015/2015,
TCD 2015 V06, TCD 12.0 V6

Anbaukombination C

BoWex® 80 FLE-PA 11 1/2"
SAE-3/9 Pumpenanbauflansch

Deutz-Motor
BF4/6M 1012/2012, BF4/6 1013/2013,
TCD/TD 2012 L04/06 2V/4V, TCD/TD 2013 L04/06 2V, TCD 4.1 L4, TCD 6.1 L6

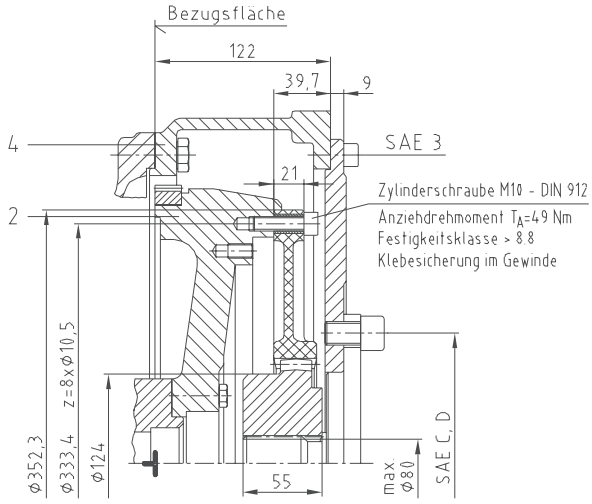

ACHTUNG: Entsprechend der Motorleistung ist die Kupplungsanordnung durch den Anwender zu prüfen. Nach erfogtem Kupplungsanbau Kurbelwellenlängsspiel prüfen. Sollmaß für Lagerluft: Motor 1012/1013/2012/2013 = 0,1 - 0,28 mm; Motor 1015 = 0,2 - 0,4 mm
DEUTZ übernimmt keine Haftung für außerhalb des DEUTZ Lieferumfanges liegende Maßgaben und/oder Teile.

Bei techn. Rückfragen hinsichtlich der Kupplungsausführung wenden Sie sich bitte an:
KTR-Kupplungstechnik GmbH, Postfach 1763, D-48407 Rheine, Tel.: 05971/798-0

E	D	C	B	A	Pos.	Benennung	Nummer	G(kg)	Baus.-Nr.
1	-	-	-	-	7	Schwungrad (SAE-11 1/2") J= 2,255 kgm²		66,7	
1	1	-	-	-	6	Anschlußgehäuse (SAE-1)		45,6	
-	1	-	-	-	5	Schwungrad (SAE-14") J= 2,264 kgm²		61,6	
-	-	1	-	-	4	Anschlußgehäuse (SAE-3)			
-	-	-	1	1	3	Anschlußgehäuse (SAE-4)			
-	-	1	-	-	2	Schwungrad (SAE-10 u. 11 1/2") J= 0,872 kgm²			
-	-	-	1	1	1	Schwungrad (SAE-8 u. 10") J= 1,03 kgm²			
Anbau-kombination									

DEUTZ 1012 / 1013
siehe 0420 8900 UB 0130-97